HT5018

Miniature Bodywork Flexible Operation

Lifting height	Power	Tyre	Rated load
17600mm	91Kw/122hp	440/80-24 Tubeless	5000Kg

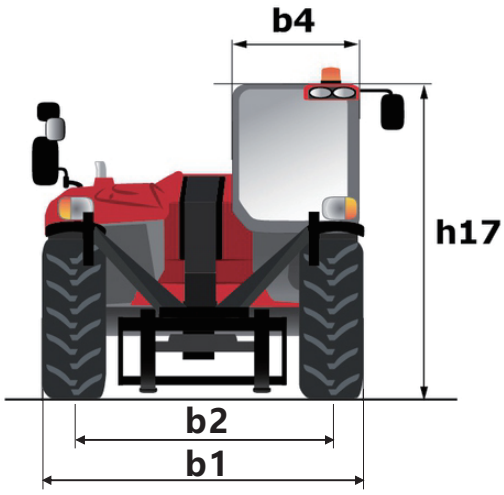

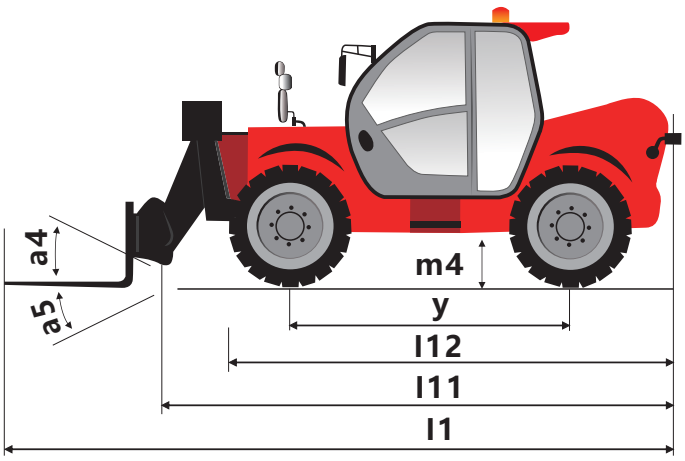

Specification

Capacities		
Max. capacity		5000 kg
Max. lifting height		17.55m
Max. outreach		11.2m
Weight and dimensions		
Overall length to carriage	l11	6.4 m
Length to face of forks	l1	7.62 m
Min transport size	l12	6.3 m
Overall width	b1	2.35 m
Track width	b2	1.95m
Overall height	h17	2.65 m
Wheelbase	y	3.6 m
Ground clearance	m4	0.38m
Overall cab width	b4	0.84 m
Tilt-up angle	a4	12 °
Tilt-down angle	a5	90 °
External turning radius (over tyres)		4.1 m
Unladen weight (with fork)		13800kg
Tires type		Tubeless
Standard tires	l/e/s	440/80-24
Forks length/ width/ section		1220 mm x 125 mm / 50 mm
Performances		
Lifting		35 s
Lowering		35s
Extension		29 s
Retraction		17 s
Crowd		9 s
Dump		9 s
Engine		
Engine brand		Yuchai (optional)
Standard		National II
Max. fuel sulphur content		5000 ppm
Engine model		YCD4J22T-125
Number of cylinders / Capacity of cylinders		4 - 4400 cm³
I.C. Engine power rating - Power		122 Hp / 91 kW
Max. torque / Engine rotation		400 Nm @ 1400 rpm
Drawbar pull (Laden)		10000 daN

Capacities	
Transmission type	Torque converter
Number of gears (forward / reverse)	4 / 4
Max. travel speed	40 km/h
Parking brake	Automatic air-cut brake
Service brake	immersed multi-discs braking on front & rear axles
Hydraulics	
Hydraulic pump type	Gear pump
Hydraulic flow	150L
Tank capacities	
Engine oil	5.5L
Hydraulic oil	170L
Fuel tank	195L
Noise and vibration	
Noise at driving position (LpA)	82 dB
Noise to environment (LwA)	105 dB
Vibration on hands / arms	< 2.50 m/s²
Miscellaneous	
Steering wheels (front / rear)	2 / 2
Drive wheels (front / rear)	2 / 2
Safety cab homologation	FOPS level 2 cab

*Parameters and dimensions are subject to the actual product

Bitte unterweisen bzw. informieren Sie den Bediener uber mogliche Gefahren durch Vibrationen. auf ebenem und befestigten Untergrund bei entsprechender FahrweiseEinsatz in der Gewinnung unter harten Umweltbedingungen.

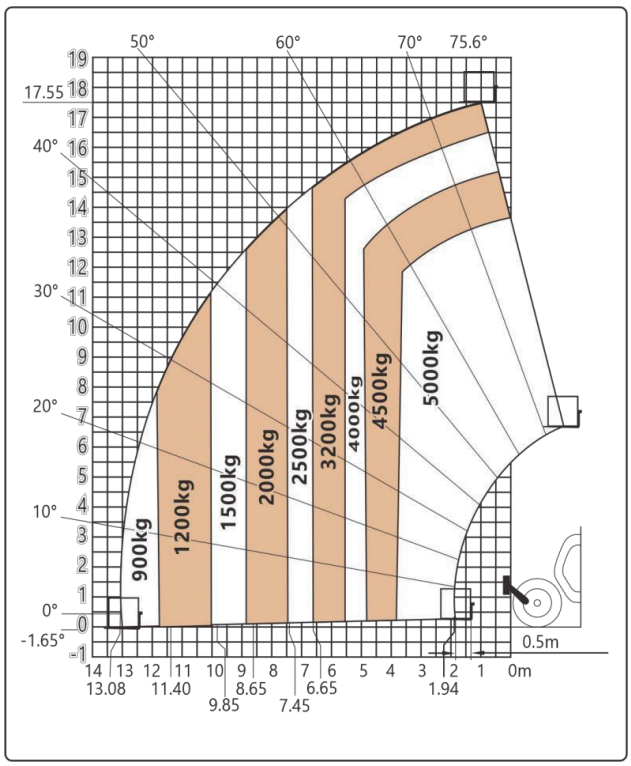

Machine on tyres with forks - with levelling device Metric

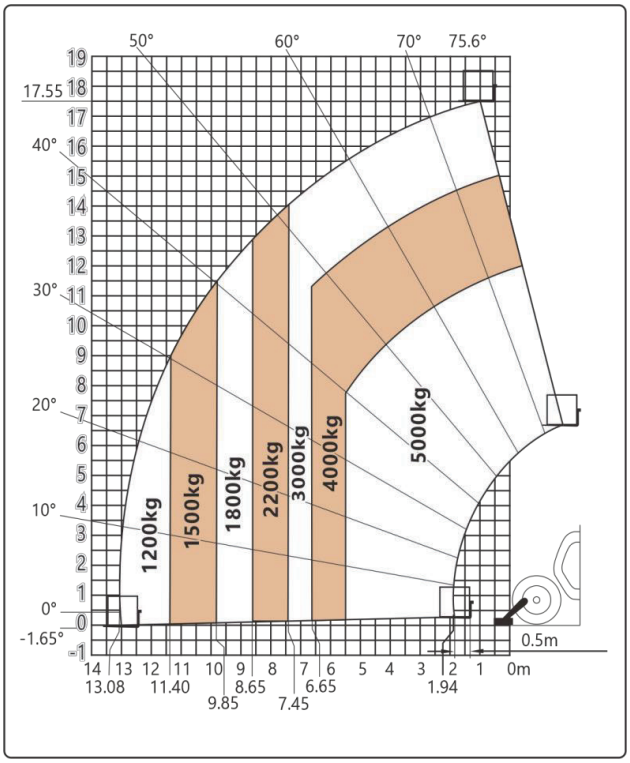

Machine on lowered stabilisers with forks Metric